Service Parts

CT4-LX
HC4-LX

LINERLESS KIT

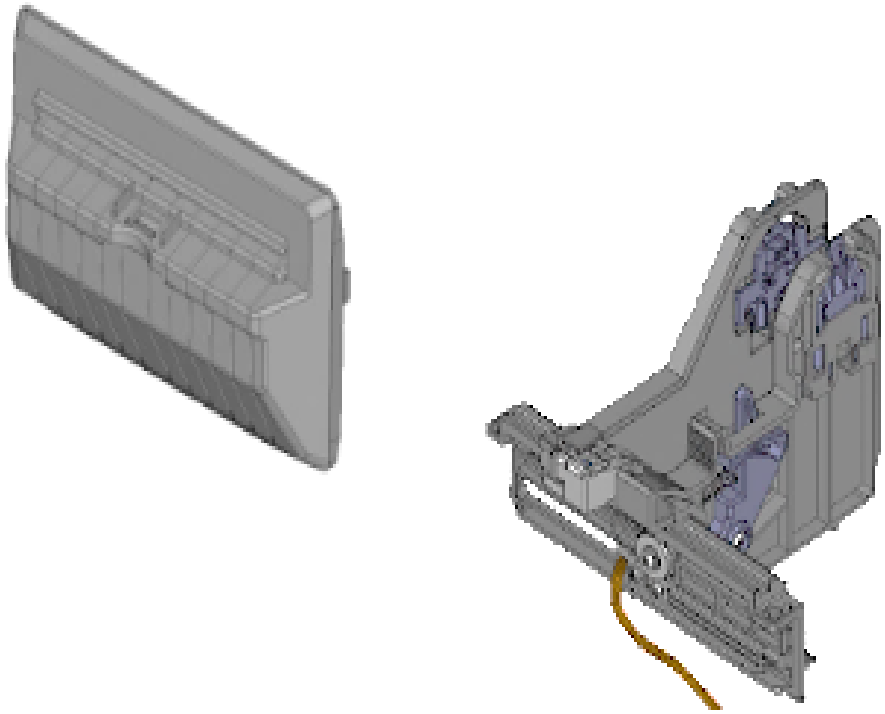

Accessories and Option

TOP

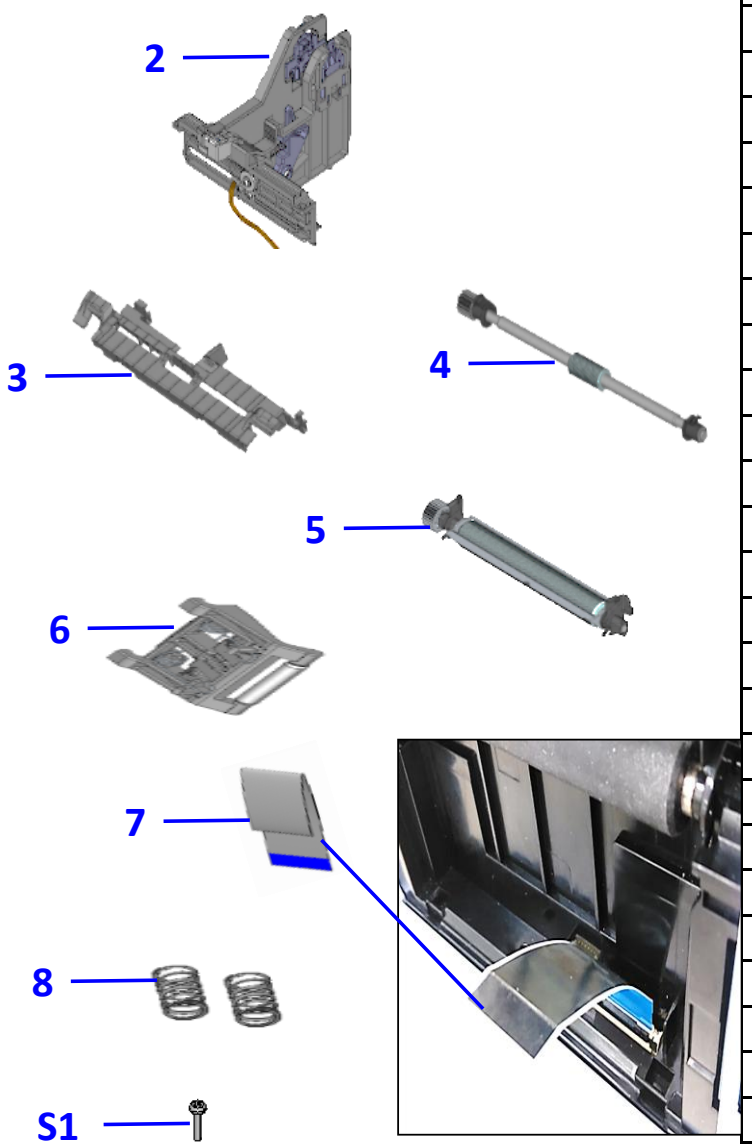

No.	FIRST CODE	DESCRIPTION	NOTE
2	R36107103	LABEL GUIDE ASSY (LINERLESS)	
3	R36083202	INNER COVER B (COAT)	
4	R35353101	FEED ROLLER S A	
5	R35657502	PLATEN ROLLER S/A	
6	R35363201	NIP ROLLER ASSY	
7	R35646401	CUT UNIT CABLE_1 SET-LF	
8	P59426001	SPRING HEAD (P)	
S1	MH0301021	PAN HEAD P TIGHT SCREW	

CT4-LX/HC4-LX Fig-1

Accessories and Option

TOP

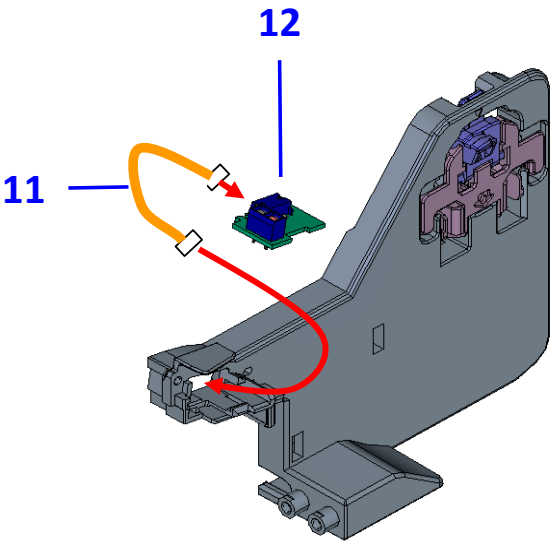

No.	FIRST CODE	DESCRIPTION	NOTE
11	R35647200	IM SENSOR CABLE SET-LF	
12	R36113701	CT4LX-IM PCB ASSY-LF	

Accessories and Option

TOP

LINERLESS CUTTER KIT: WWCT0501N

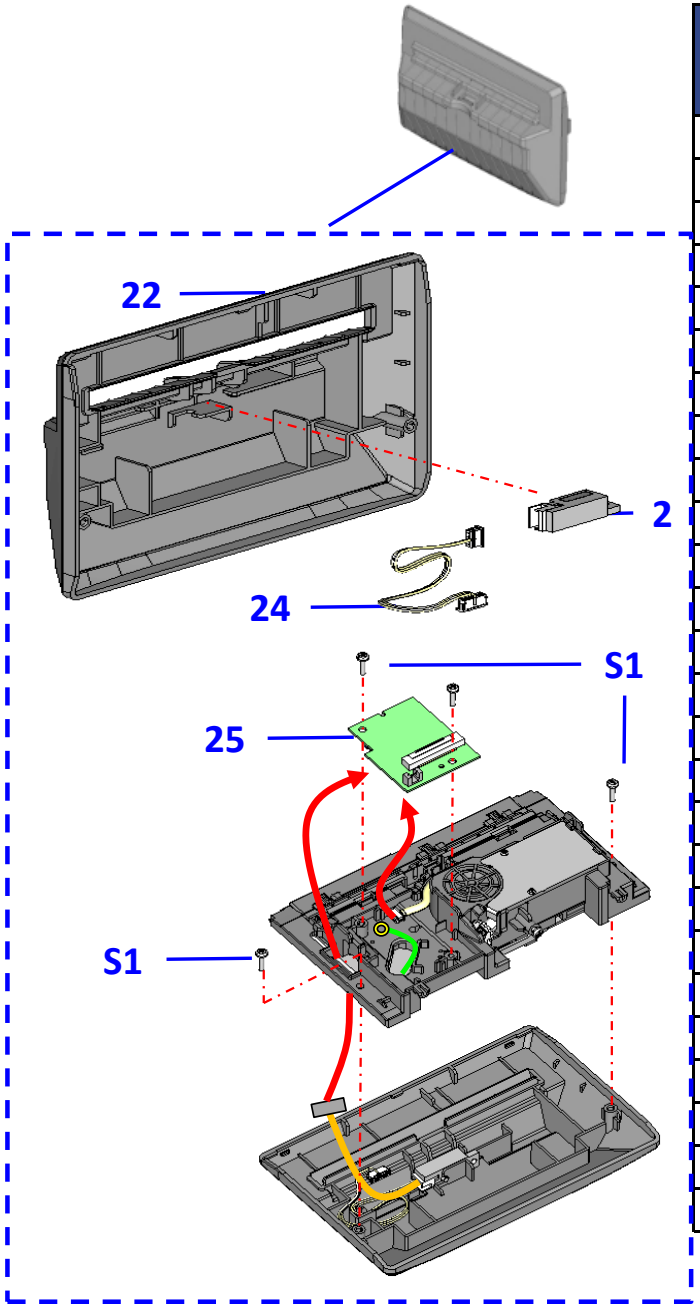

No.	FIRST CODE	DESCRIPTION	NOTE
22	R36086904	CUTTER COVER B (COAT)	
23	F05171900	PHOTO INTERRUPTER-LF	
24	R35646510	CUT UNIT CABLE_2 SET-LF	
25	R36114602	CT4LX-CUTTER PCB ASSY-LF	
S1	MH0301021	PAN HEAD P TIGHT SCREW	

Date	Ver	Note	RV NO	CT NO.
9-Jan-20	1.0	First Version		